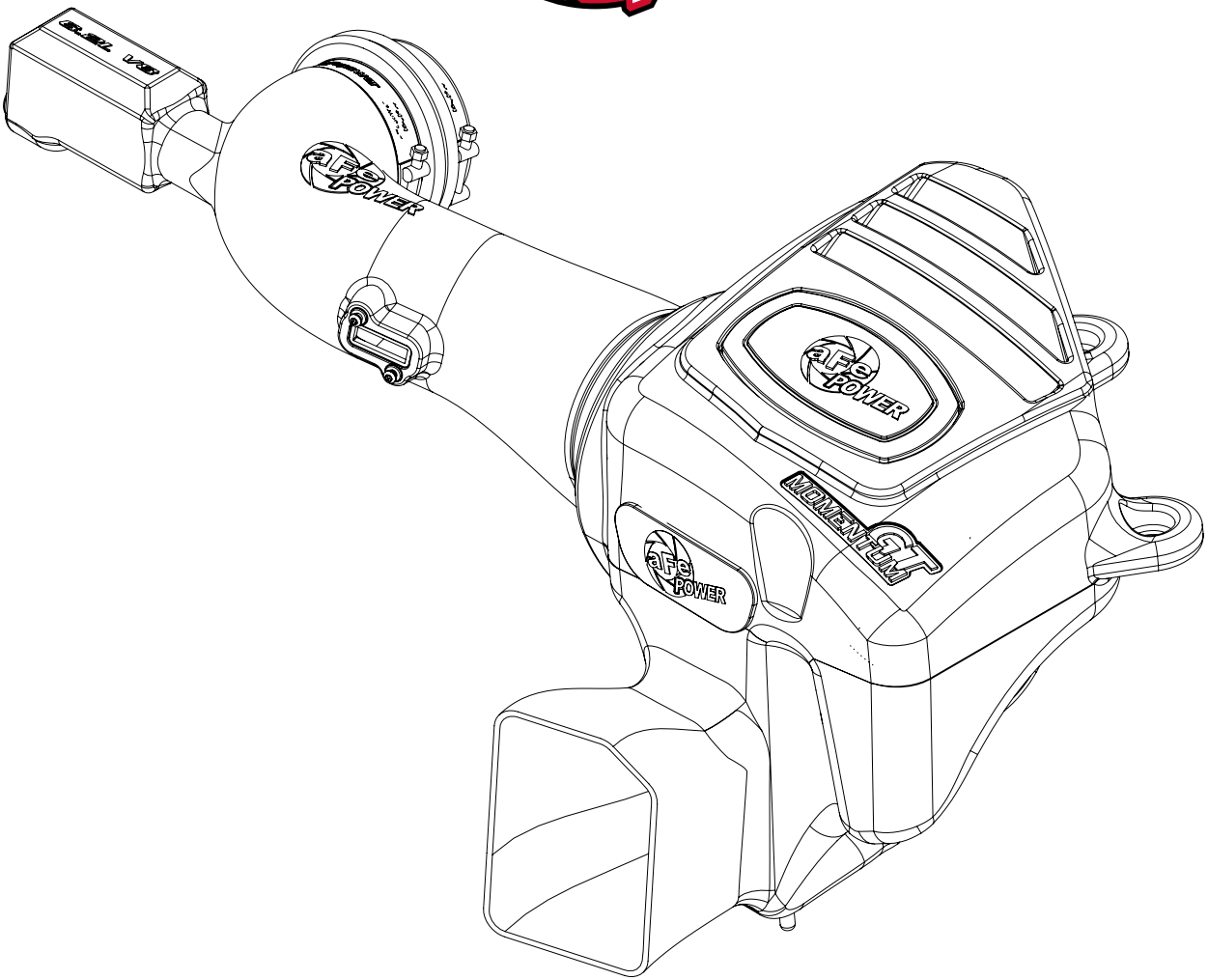

advanced FLOW engineering

Momentum GT Air Intake System

Instruction Manual P/N: 51-74204 / 54-74204

Make: **Chevrolet** Model: **Camaro SS** Year: **2013-2015** Engine: **V8-6.2L w/ Electric Steering**

- Please read the entire instruction manual before proceeding.
- Ensure all components listed are present.
- If you are missing any of the components, call customer support at 951-493-7100.
- Ensure you have all necessary tools before proceeding.
- Do not attempt to work on your vehicle when the engine is hot.

Retain factory parts for future use.

Label	Qty.	Description	Part Number
A1	1	Air Filter (Pro 5R)	24-91107
A2	1	Air Filter (Pro DRY S)	21-91107
B	1	Tube	05-74204B1
C	1	Housing	05-74204B2
D	1	Coupling, Silicone	05-01375
E	2	Clamp, T-bolt	03-50265
F	2	Screw, M4	03-50491
G	1	Plug, Urethane	05-00937

Installation will require the following tools:
8mm nut driver, 11mm & 10mm deep socket & driver, T20 Torx.

Warranty Information available at: https://afepower.com/contact#warranty

Note: Legal in California for use on race vehicles only. The use of this device on vehicles used on public streets or highways is strictly prohibited in California and others states that have adopted California emission regulations.

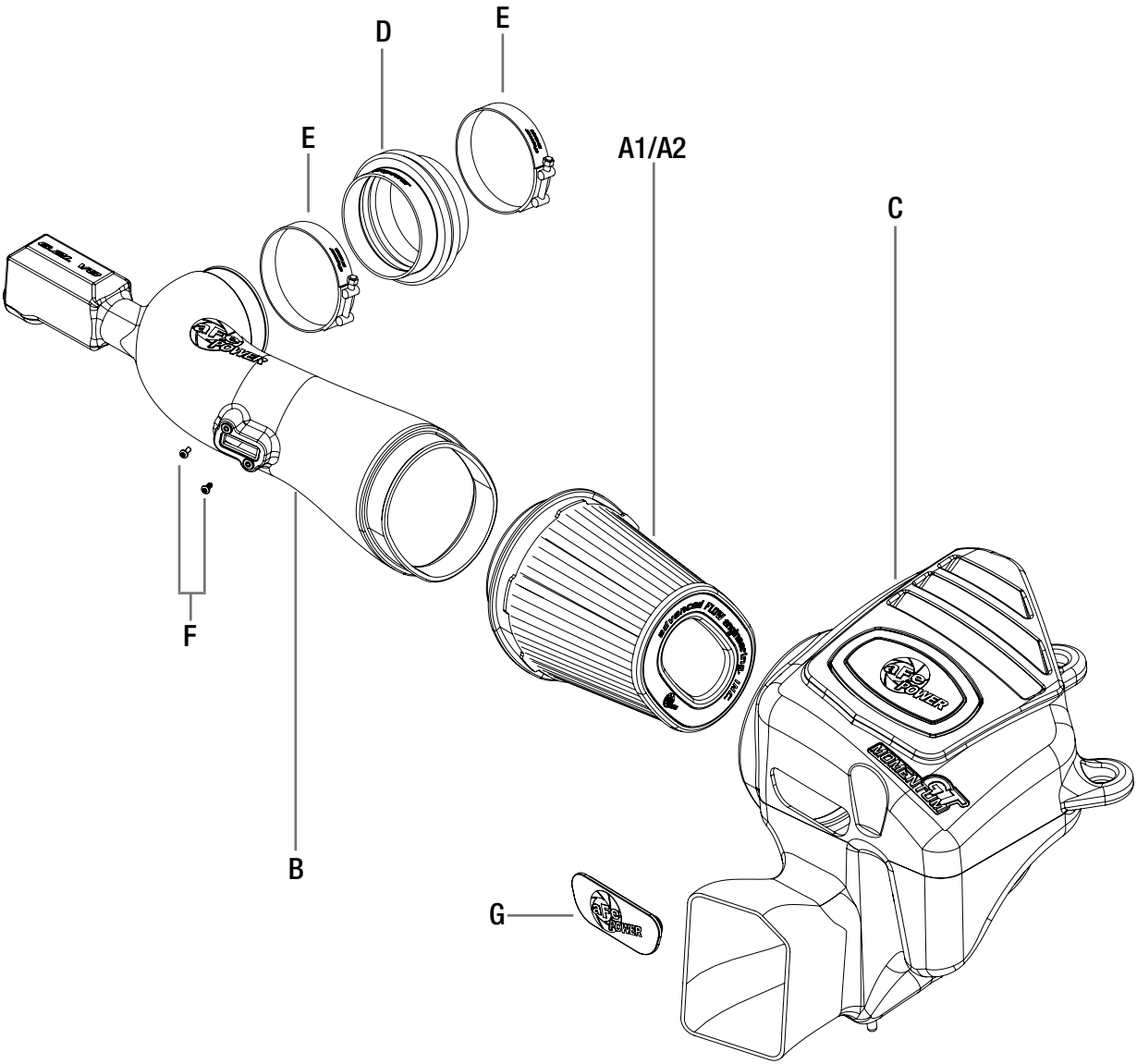
D
E
E
A1/A2
C
F
B
G

Figure A

Refer to Figure A for Step 1

Step 1: Remove the oil cap (1) and remove the engine cover (2). Reinstall the oil cap.

Figure B

Refer to Figure B for Step 2

Step 2: Disconnect the breather tube (3) from the intake tube.

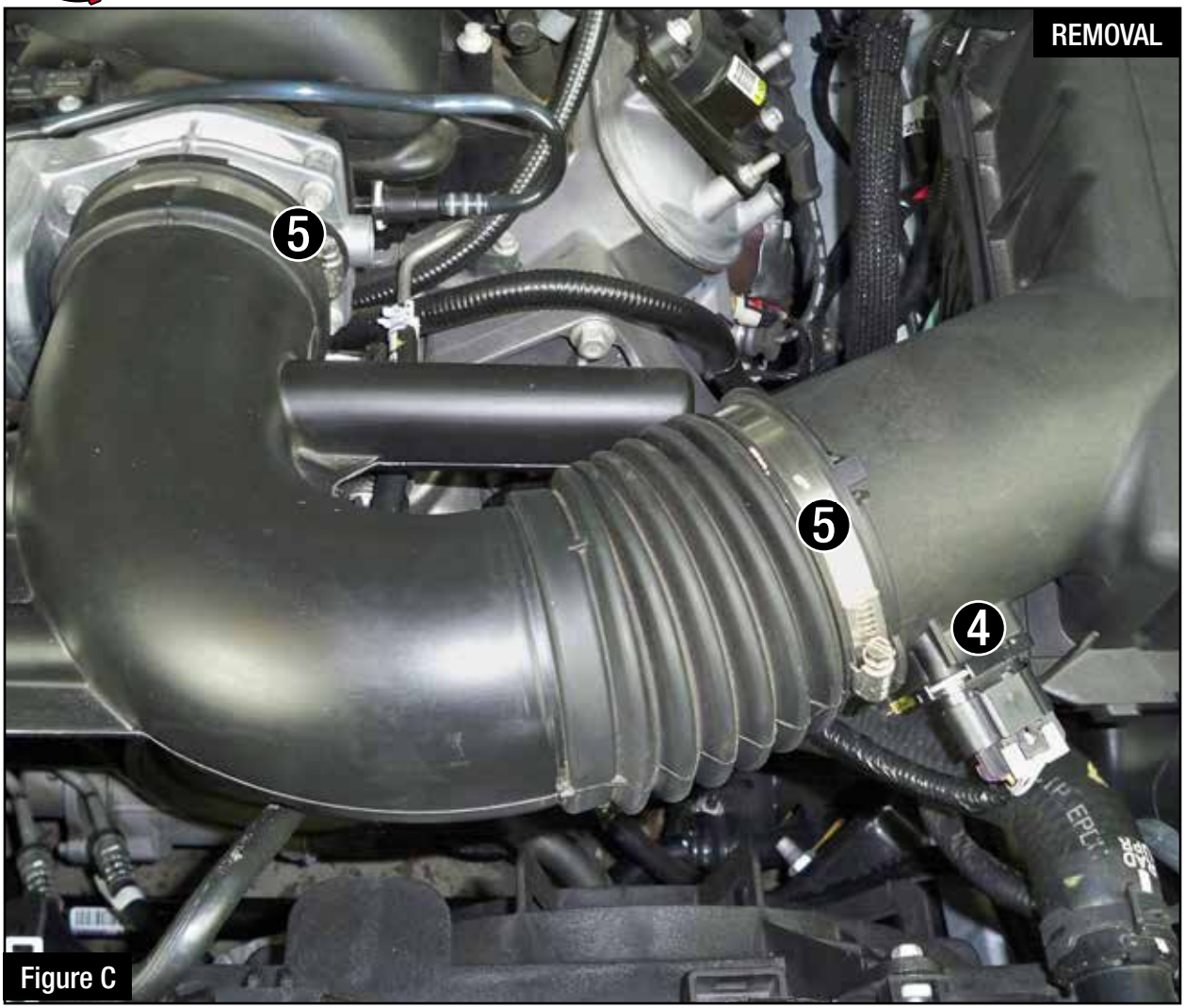

Figure C

Refer to Figure C for Steps 3-4

Step 3: Disconnect the MAF sensor (4) from the intake tube.

Step 4: Use an 8mm nut driver to loosen the stock clamps (5) at the throttle body and the air box. Remove the stock intake tube.

Figure D

Refer to Figure D for Step 5

Step 5: Use a 10mm deep socket and driver to remove the two nuts (6) holding down the air box and set them aside. Remove the air box by pulling up from its mounting points.

Figure E

Refer to Figure E for Steps 6-7

Step 6: Use the provided plug (7) to close additional air inlet if you want to completely seal the air box. Best performance gain is obtained by having more air flow (no plug).

Step 7: Slide the aFe filter and clamp into the aFe housing and push it in until it locks into place. Do not tighten the clamp at this time.

Figure F

Refer to Figure F for Steps 8-9

Step 8: Remove the two metal inserts and grommets (8) from the stock airbox.

Step 9: Insert them (8) into the aFe housing.

Figure G

Refer to Figure G for Steps 10-11

Step 10: Install the housing assembly into the vehicle by pushing down air box pin into the bottom rubber grommet and through the two mounting studs. Make sure the pin is completely through the mounting grommet.

Step 11: Using a 10mm deep socket and driver, install the two nuts (9) removed earlier and tighten down.

Figure H

Refer to Figure H for Step 12

Step 12: Using a Torx 20 driver, remove the mass air flow sensor (10) from the upper half of the air box and install it on the aFe intake tube using the two supplied M4 screws. Do not over tighten.

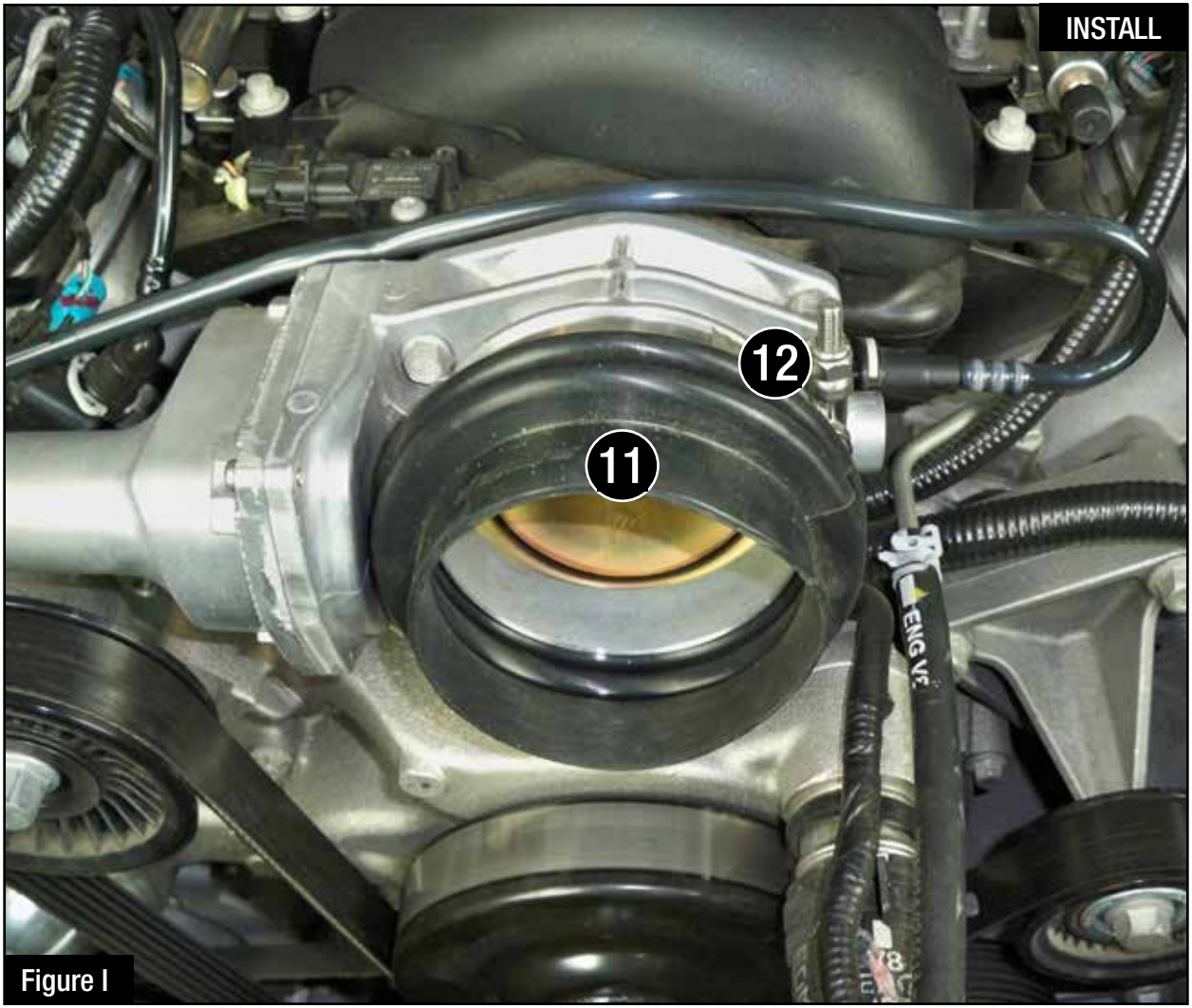

Figure I

Refer to Figure I for Step 13

Step 13: Install the supplied silicone coupler (11) with the supplied T-bolt clamp (12) on the throttle body.

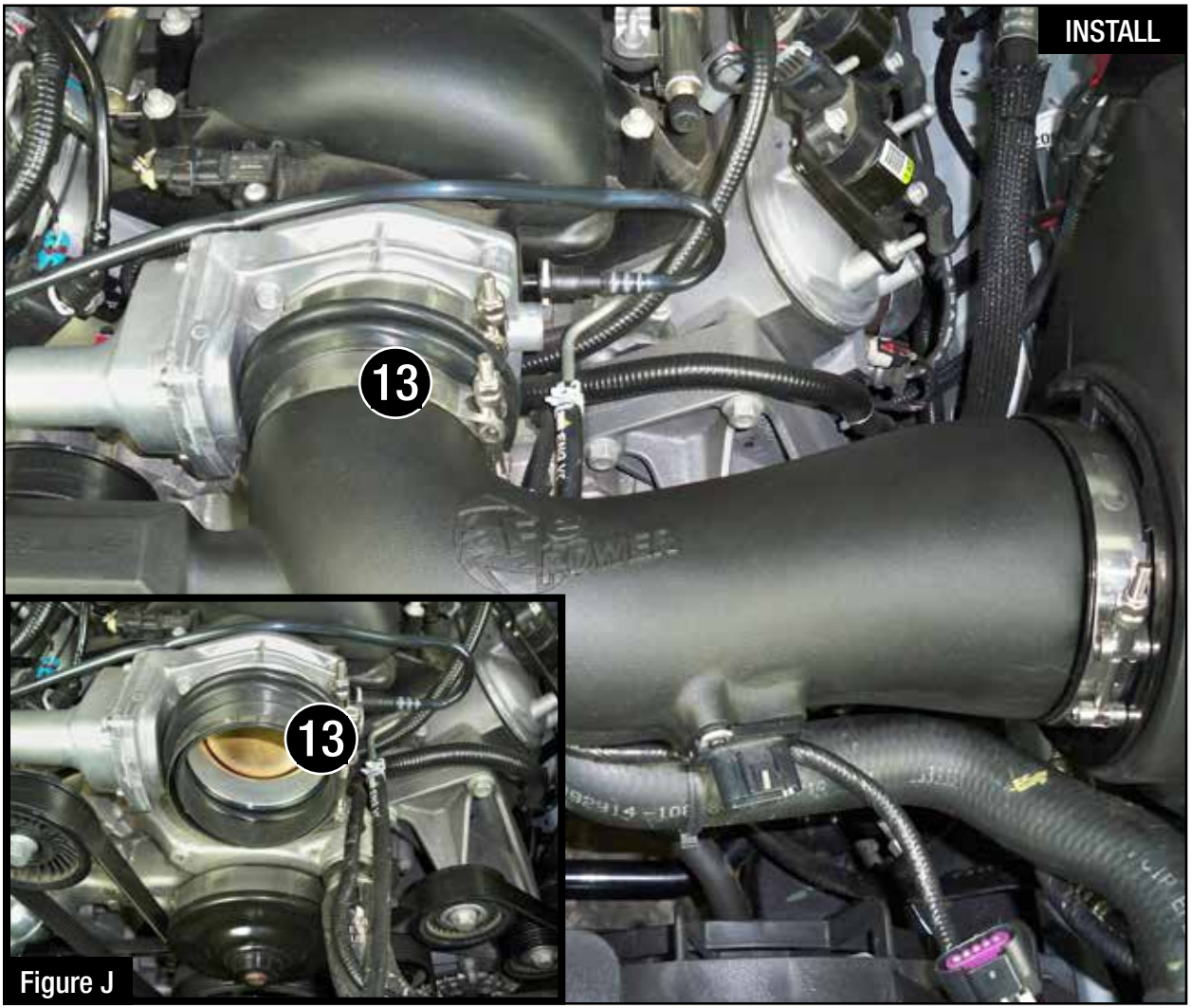

Figure J

Refer to Figure J for Steps 14-15

Step 14: Place the other supplied T-bolt clamp (13) on the silicone coupler. Do not tighten at this time.

Step 15: Slide the aFe intake tube into the air filter then into the silicone coupler. Tighten all the clamps.

Refer to Figure K for Step 16

Step 16: Connect the mass air flow sensor (14) and the breather tube (15).

Figure L

Refer to Figure L for Step 17

Step 17: Install the engine cover in reversal of Step 1. Check all the components are tight and secure. Your installation is now complete.

NOTE: Check all bolts, clamps, and connectors after 200 miles.

advanced FLOW engineering, inc.
252 Granite Street Corona, CA 92879
TEL: 951.493.7100

P/N: 06-80930